T-34 Spar Corp.

2800 Airport Rd.
Ada, OK 74820
Phone 580-436-4833
Fax 580-436-6622

DOCUMENT NO.: 45-6460002
DATE: May 14, 2010
REVISION: B

TITLE: INSTALLATION INSTRUCTIONS FOR T-34, T-34A, and T-34B MAIN WING SPAR LOWER WING BOLT REPLACEMENT AND TENSION CABLE PER T-34 SPAR CORP. AMOC TO AD 2004-25-51

READ ALL OF THESE INSTRUCTIONS BEFORE UNPACKING ANY OF THE COMPONENTS !

Reference Documents:

T-34 Spar Corp. AMOC-1, Rev. C dated December 2, 2003, Wings- Inspection and Repair of T-34 Wing Spar Structure

Addendum 1, March 18, 2004 to T-34 Spar Corp. AMOC-1, Rev. C dated December 2, 2003

AD 2001-13-18R1, Raytheon Aircraft Company, Beech Models 45(YT-34), A45 (T-34A, B-45), and D45 (T-34B) Airplanes

SB 57-3329, Wings-Inspection of Wing Spar Structure, Raytheon Aircraft Company, dated February, 2000

Fatigue Technology Inc., Cold Working Process Spec. No. 8101D

T-34A/B Main Spar Carry-through Surface Eddy Current Inspection Procedure No. TSC 3505, Rev. B, dated 3/31/05 or later approved revision

T-34A/B Main Spar Carry-through Rotating Probe, Bolt-hole Eddy Current Inspection Procedure No. TSC 3507, Rev. C, dated 04/05/10 or later approved revision

1. Planning Information

A. Eligibility

(1) Airplanes conforming to Type Certificate No. 5A3.

Beech Mentor 45 (Military YT-34), Serials G-3 through G-6;
A45 (Military T-34A), Serials G-7 and After;
B45, Serials CG-1 and After;
D45 (Military T-34B), Serials BG-1 and After;
B45 (T-34 Manufacture by Canadian Car and Foundry), Serials 34-1 through 34-125.
If the airplane main spar carry through structure or wings have been modified by any Supplemental Type Certificate (STC), the airplane owner will have to contact the owner of the STC to determine whether this AMOC applies.

(2) Spares

All spare fuselage structures, which conform to Type Certificate No. 5A3 for the airplanes listed in Paragraph (1) above.

B. Reason

These Installation Instructions are being issued as a part of an AMOC (Alternate Means of Compliance) to A.D. 2004-25-51. Following the required inspections, cold working, fastener replacements, installation replacement wing bolts and the "ALEC" reinforcement cable, a new set of instructions for continued airworthiness is established and the flight restrictions listed in A.D. 2004-25-51 may be removed.

C. Description

Part I

Provides instructions for the eddy current inspection and cold working of the fastener holes in the Main Spar Carry Through Structure (MSCTS).

Part II

Provides removal, inspection, and replacement procedures for the replacement wing attach bolts and installation of the "ALEC" reinforcement hardware.

D. Compliance

Compliance with these Installation Instructions in their entirety is mandatory in order for the procedure to be an AMOC to AD 2004-25-51.

E. Approval

The engineering data, installation instructions and instructions for continued airworthiness contained in this AMOC are FAA approved.

F. Manpower

The following information is for planning purposes only:

Estimated man-hours to check the logbooks: 1 hour
Suggested number of men: 1 man

Estimated man-hours to prepare aircraft for inspection: 2 hour
Suggested number of men: 1 man

Estimated man-hours to set up to perform
eddy current inspection: 1 hour
Suggested number of men: 1 man

Estimated man-hours to perform eddy current inspection of 8
fasteners in center spar section: 1.5 hour
Suggested number of men: 1 man

Estimated man-hours to replace 8 fasteners in center spar structure: 1 hour
Suggested number of men: 1 man.

Estimated man-hours to remove two lower fwd main wing bolts and replace with
new ALEC bolts: 1 hour
Suggested number of men: 1 man

Estimated number of man-hours to install and torque ALEC cable: 1.5 hour
Suggested number of men: 2 men.

Estimated man-hours to complete log book entries: 1 hour
Suggested number of men: 1 man

The above is an estimate based on experienced, properly equipped personnel complying with these instructions. Occasionally, after work has started, conditions may be found which could result in additional man-hours.

G. Weight and Balance

Additional weight: 3.2 lbs at station 87.0 .

H. Electrical Load Data

Not changed.

I. Software Accomplishment Summary

Not applicable.

J. References

Airworthiness Directive 2004-25-51

Airworthiness Directive 2001-13-18R1

Appropriate Chapter of the applicable Shop Manual or Maintenance Manual

Fatigue Technology Inc., Cold Working Process Spec. No. 8101D

T-34A/B Main Spar Carry-through Surface Eddy Current Inspection Procedure No. TSC 3505, Rev. B, dated 3/31/05 or later approved revision

T-34A/B Main Spar Carry-through Rotating Probe, Bolt-hole Eddy Current Inspection Procedure and Cold Work No. TSC 3507, Rev. C, dated 04/05/10 or later approved revision

K. Publications Affected

None

L. Interchangeability of Parts

Components installed as a part of this AMOC are not interchangeable with OEM components.

2. Material Information

A. Materials- Price and Availability

Contact T-34 Spar Corp, Ada, OK, for information. Phone: 580-436-4873

B. Industry Support

Not applicable

C. Airplanes

The following parts required for this modification may be ordered from T-34 Spar Corp.:

Part Number	Description	Quantity Per Airplane
NAS2904-12 Bolt, AN960-416 Washer and MS21042L4	Bolt, nut, & washer for center fuselage to replace fasteners removed for eddy current inspection at fastener 8 & 9 locations.	8 each
50-105011	Washer (existing washer used in bathtub fitting under head of existing nut)	2
45-133A	Bolt	2
45-1500001B	Washer	2 per T-34B only*
45-1500002A	Washer	2 per T-34A only*
45-132	Nut, Modified	2
45-136	Through-Bolt, Cable Attach	2
45-1750001	Assembly-Tension Cable T-34A/B	1
45-138	Collar	2
45-139	Nut – Cable Tension	2
AN316-7	Jam Nut	2
TT-N-95	Naphtha (Solvent)	A/R
MIL-C-5541	Alodine	A/R
MIL-P-23377	Primer, Polyamide Epoxy	A/R
MIL-C-16173 Grade 2	Corrosion Preventative Lubricant	A/R
45-1750002	Installation Drawing	1

NOTE

*As determined by the configuration of the Main Spar Carry Through structure – not the wings.

CAUTION

Do not attempt to screw the threaded components into any of the mating parts without first wetting those thread surfaces as described later in this document.

D. Spares

Not applicable

E. Reidentified Parts

None

F. Tooling – Price and Availability

See part I and Part II, respectively, for tools and special equipment.

3. Accomplishment Instructions

This AMOC shall be accomplished as follows:

NOTE

Should any difficulty be encountered in accomplishing this AMOC, Contact T-34 Spar Corp., Ada, OK. Phone: 580-436- 4873.

A. Airplane

WARNING

Observe all Warnings and Cautions contained in the aircraft maintenance manuals during the performance of this AMOC. Whenever any part of this system is dismantled, adjusted, repaired or renewed, detailed investigation must be made on completion to make sure that distortion, tools, rags, or any other loose articles or foreign matter that could impede the free movement and safe operation of the system are not present, and that the systems and installations in the work area are clea**n.**

Part I – Eddy Current Inspection of Main Spar Carry Through Structure (MSCTS)

(1) Inspect the airplane logbooks to determine whether any other STC's, AMOCs or Service Bulletins have been performed on the aircraft that might conflict with the installation of the components or affect the instructions for continued airworthiness for this modification. Contact the T-34 Spar Corp. with any questions.

(a) Examples of possible conflicting STC's, AMOCs or Service Bulletins are Raytheon Service Bulletin 57-3329 or the "Saunders Strap" or "Parks- Modified Spar Carry Through". Check with T-34 Spar Corp. for compatibility.

(2) Prepare aircraft for inspection of MSCTS and installation of ALEC cable as follows:

(a) Disconnect the airplane battery.

(b) Gain access and remove front seat and floor panels as needed to access #8 and #9 fasteners on MSCTS (4 locations, with two fasteners at each location.)

(c) Break torque on Main Spar Lower Wing Attach Bolt/Nut prior to placing airplane on jacks. Then place the airplane on a three-point jack and raise the airplane until the wheels are just clear of floor. Then lower the aircraft until the tires contact the floor and continue thereafter until the main landing gear struts are compressed between 1 and 1½ inch.

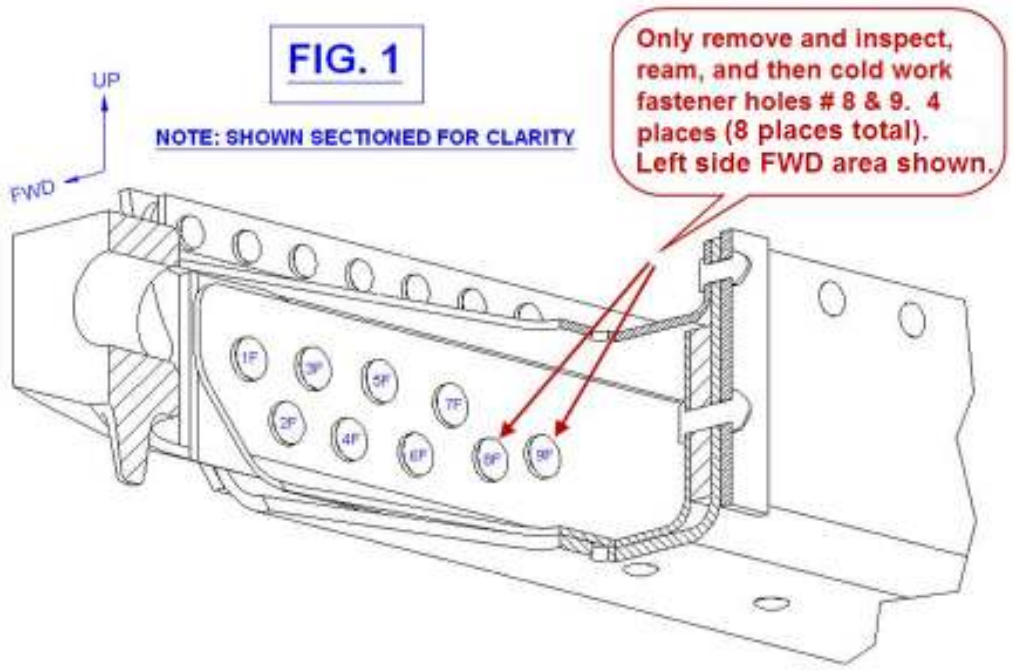

Fig 1. Location of 8 & 9 fastener holes in MSCTS for eddy current inspection, from TSC 3507, Rev C, 4/5/10.

(3) Carefully identify and then split collars at fastener hole locations 8 & 9 (four places per side – 8 total) as defined in Fig 1 of TSC 3507, REV C, dated 4/5/10. ONLY remove fasteners at hole locations 8 & 9. Then remove the collars from each of the #8 and #9 fasteners insuring not to damage MSCTS. Once collars are removed, gently tap fasteners out.

(4) Ream holes and perform "Bolt Hole" eddy current inspection in accordance with T-34 Spar Corp. TSC-3507, Rev. C, dated 4/5/10 or later approved revision. If this inspection has previously been performed, or if required to clean holes for inspection, it is acceptable to ream up to limits listed in T-34 Spar Corp. TSC-3507, Rev. C, dated 4/5/10 or later approved revision. If crack indications are found, contact T-34 Spar Corp. for DER disposition. If no crack indications are found, document the successful inspection as described in TSC-3507. Do not replace fasteners until after "cold working" holes.

(5) "Cold work" holes (8 places) per T-34 Spar Corp. TSC-3507, Rev. C and Fatigue Technology Process Spec 8101D or later approved revisions. Required tooling kits are available from T-34 Spar Corp.

(6) Clean area and perform "Surface" eddy current inspection in accordance with T-34 Spar Corp. TSC-3505, Rev. B, dated 3/31/05 or later approved revision. If crack indications are found, contact T-34 Spar Corp. for DER disposition. If no crack indications are found, document the successful inspection as described in the above procedure.

(7) Replace each fastener with NAS2904-12 Bolt, AN960-416 Washer and MS21042L4 Nut.

Part II- Installation of Replacement Wing Bolts and ALEC Cable Assembly

(1) Tools and Equipment:

Fig. 2 Tools & supplies required for ALEC cable installation.

(a) In addition to typical shop tools:

i) A long reach 5/8ths inch, SIX POINT, box end wrench is required to install the special tension cable nut. A short reach wrench with a "cheater" will also work.

ii) A torque wrench extension/adaptor sufficient to access the bath tub fitting tight clearance and allow the wing bolt nut to be torqued to 250 ft-lbs (3,000 in-lbs) from the bath tub fitting.

iii) T-34 Wing Bolt tool kit to break loose and remove the existing bolts.

(2) Component parts:

Fig. 3 ALEC parts to be installed on T-34 and T-34A aircraft. T-34 B is identical except the washers under the head of the wing bolts are 0.25" thick, rather than 0.43" thick for the A model.

(3) Installation Steps:

(1) Install at least one layer of protective tape or other suitable protection on interior surface of each bathtub fitting to insure that the bathtub fitting is not scratched or marred by wrenches or components during installation of ALEC cable. See Fig 4 for one example of appropriate protective measures.

Fig. 4 Protective tape in place to protect bathtub fitting.

(2) Before removing any wing attach bolt, draw an outline of the wing position on the fuselage with a grease pencil to aid in realignment, should it be necessary.

(3) **IMPORTANT:** Place aircraft on jacks before proceeding to next step.

(4) Carefully remove existing wing bolts/nuts insuring not to scratch aluminum wing bathtub attach fitting with tooling. For easier removal of wing bolt, it may be necessary to adjust jack height and weight on wheels to prevent binding of wing bolts.

CAUTION

There should be no bolt binding during removal or installation. Do not drive or screw a bolt in or out of the fittings. If the wing is shifted to remove the bolts, the soft aluminum washers between the upper wing and fuselage fittings must be replaced. Replacement of the soft aluminum washers between the upper wing fittings is not required if the wing is not shifted.

(5) Remove protective tape and using a nonmetallic brush thoroughly clean the fittings with solvent. Inspect the surface condition of each fitting; focus special attention to the washer seat and the bolt bore area. If scoring, corrosion pitting, or washer impressions (witness marks) are discovered in this area contact the Technical Support Department of Hawker Beechcraft Corporation at 1-800-429-5372 or 316-676-3140 or the T-34 Spar Corp for DER disposition. Reapply protective tape to bathtub fittings.

(6) One side at a time, coat the bearing faces and bolt bores of the fittings, the complete bolt (including the threads), the 7/16ths inch internal bore of the new bolt, the washers, and nut with MIL-C-16173 Grade 2 corrosion preventative lubricant. Install wing bolt and torque nut promptly as outlined in the next two steps after applying corrosion preventative lubricant, as lubricant will become "thick" and "sticky" over time.

(7) One side at a time, install the new wing attach Bolts, T-34 Spar Corp, P/N 45-133A, washers T-34 Spar Corp P/N 45-1500001 (T-34 and T-34A) or PN 45-1500002 (T-34B), Washer 50-105011 (this existing washer found between the existing nut and the bathtub fitting may be re-used if it is in good condition) and nuts T-34 Spar Corp P/N 45-132 in their respective holes per T-34 Spar Corp drawing No. 45-1750002. (Note: Do not yet install ALEC tension cable or its associated hardware.)

(8) Torque the new wing attach Bolts to 2880 to 3000 in-lbs (inch-pounds) [240 to 250 ft-lbs] - wet, using referenced corrosion preventive compound lubricant.

WARNING

Ensure that the wing bolt wrenches and adaptors do not bottom out on the wing "bathtub" fittings. This could cause corrosion, erroneous torque readings and damage to the fittings

CAUTION

The torque value must be calculated for the length of the adapter used with the torque wrench. Recommend using adaptor at 90 degree angle, in which case, length of adaptor is irrelevant.

(9) **After Wing Bolts are in place and fully torqued,** remove aircraft from jacks and rest aircraft on the ground for better access during installation of the ALEC cable. Aircraft will later be raised on jacks again when the ALEC cable is tensioned.

(10) Preassemble one Cable Attach Through Bolt (T-34 Spar Corp P/N 45-136) by applying Loctite® 262™ threadlock fluid to the second and third threads of the through bolt, inserting and screwing it fully into Tension Cable Assembly P/N 45-1750001. Position Jam Nut P/N AN316-7 in place on through bolt and adjust so it is loosely in place against the tension cable swage fitting. See Fig 5. Protect the exposed threads. The through bolt must be fully threaded into the swage fitting at this time. It will later be partially unscrewed. Continue installation as quickly as possible before threadlocker sets up. See Installation drawing 45-1750002, items 3, 6, & 9.

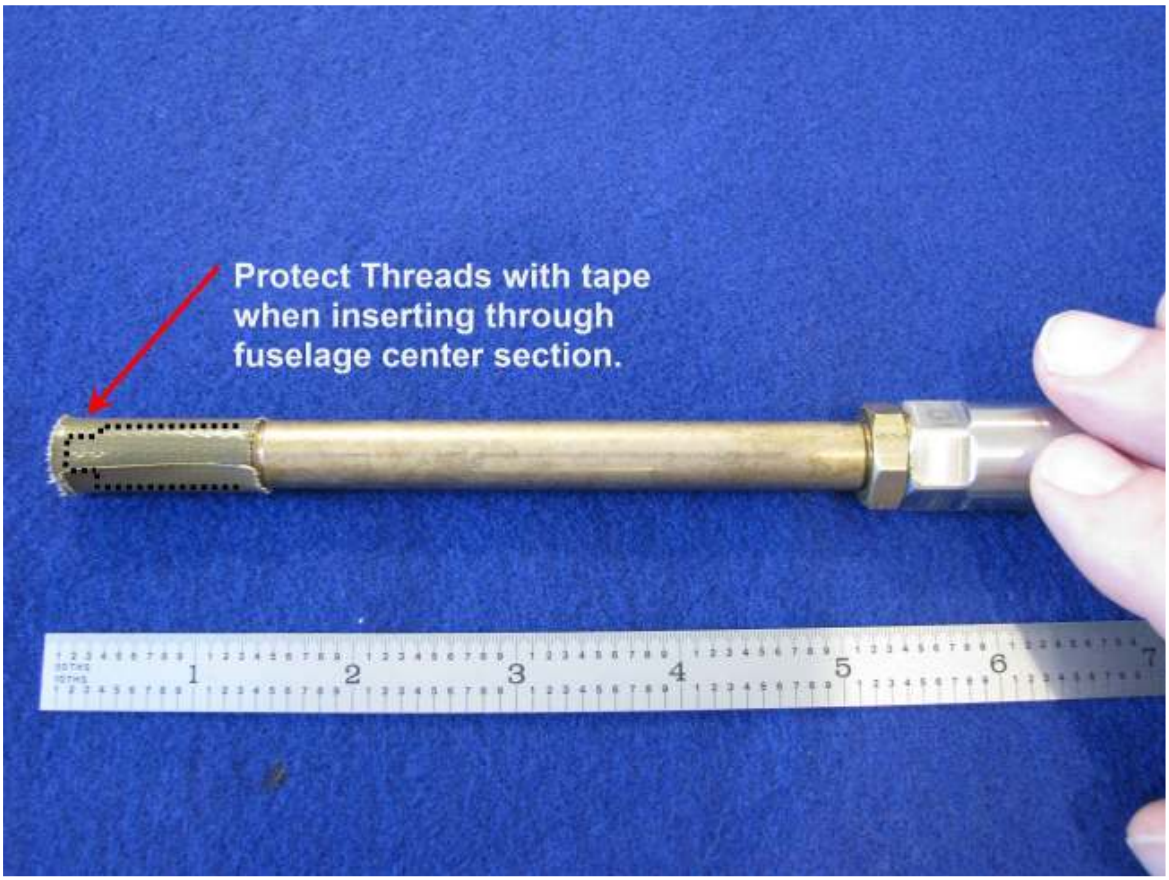

Fig. 5 Through Bolt in position with jam nut and fully inserted into cable swage fitting. Ready to be threaded through the T-34 center section.

(11) Pre-install a 45-136 through-bolt into one side of the T-34. It should be positioned with the AN316-7 jam nut in the approximate location shown in Fig. 6.

Fig. 6 Install one 45-136 Through Bolt and AN316-7 jam nut in position oriented as shown. This is done by inserting the Through Bolt into the lower access with the inboard side first and then manipulating the outboard end of the Through Bolt through the head of the newly installed Wing Bolt and then moving the Through Bolt outboard so that the end protrudes into the bathtub fitting area. After this is in place, and from the same side, insert cable/Through-Bolt assembly (see Fig 6a to 6f) from the same side with the Through-Bolt first. Through-Bolt is then routed through the entire center section. Then remove thread protection and manipulate the tip of the Through Bolt to pass it out through the open hole in the Wing Bolt on the opposite side.

Carefully install preassembly from step 10, above, into open area on lower side of MSCTS attach fitting, and feed the cable assembly (Through-Bolt first) to other side. See Fig 6a to 6g. Remove thread protection from the end of the Through Bolt. Then manipulate the through bolt and pass it fully through hole in the installed and previously torqued wing bolt. When inserted fully, the jam nut should be resting against the inboard head of the main wing bolt as shown in **Fig.6 f.** See the sequence of pictures in Fig. 6a to 6g.

Fig 6a

Fig 6b

Fig 6c

Fig 6d

Fig 6e

Fig 6f

Fig 6g

(12) Connect the remaining end of the ALEC cable swage fitting to the previously installed through bolt by following these steps:

a) Apply Loctite® 262™ threadlock fluid to the second and third threads of the through bolt that will be attached to the swage fitting. Align the through bolt and the swage fitting and thread the through bolt (with pre-positioned jam nut) into the swage fitting. Use a ¼ inch ratchet wrench on the ¼ inch hex tip of the Through-Bolt to rotate the Through-Bolt to aid in starting the threads into the swage fitting.

b) Fully thread the through bolt into the swage fitting so that the jam nut is resting loosely on the swage fitting outboard end.

c) Do not tension through bolt at this time. However, complete installation before threadlocker sets up.

(13) Establish equal spacing of the two Through Bolts and cable swage fittings by holding tension cable swage fitting at the flats with a wrench inserted up through the lower access area, and then turn and adjust the small ¼" hex on the associated Through Bolt from the end in the bathtub fitting. Unscrew the Through Bolts from the swage fittings so that there are minimal threads to allow engagement of the tension nut. Then install Collars at each end, lubricate and install 45-139 tension nuts on each end as shown in Figure 7a and Figure 7b. Do not torque or tighten tension nut at this time.

(***14) The objective is to finish the installation process with approximately two threads of the through bolt extending into the bath tub fitting. This requires some adjustment and balancing of the location of the through bolts and their respective engagements into the swage fittings on each side. Each side should end up with approximately the same number of threads showing between the swage fitting jam nut and the head of the Wing Bolt. And, each side should end up with approximately 2 threads showing on the tension nuts after all pre-torque and final tension has been applied. Fig. 11 below depicts the final configuration after safety wire has been installed.***

(15) Pick one side of the aircraft to be the "passive side" and the other side to be the "active" side. The active side is the side where the final torque and tension adjustment of the tension nut will be accomplished.

(16) On the passive side, adjust the Through Bolt so that approximately 1 to 2 threads extend outboard of the tension nut. There should be approximately 3 to 4 threads visible outboard of the jam nut on the swage cable of T-34 and T-34A model aircraft and approximately 11 threads are visible outboard of the jam nut on the T-34B model aircraft. Until experience is gained, several adjustments on each side may be required to balance the configuration of the cable. During this process, keep in mind that the outboard end of the Through Bolt on the ***active side*** should be adjusted to **NOT** extend past the outboard end of the tension bolt and should, in fact, be positioned **so that it is recessed** by approximately 2 full threads. When final torque is applied and cable tensioned, it will extend about 2 to 3 threads past the tension nut.

(17) After satisfactory balance and thread engagement of the ALEC cable is achieved, torque each Jam Nut against each respective swage fitting. Torque to 150 in-lbs . See Fig. 7c.

Fig 7a

Fig 7b

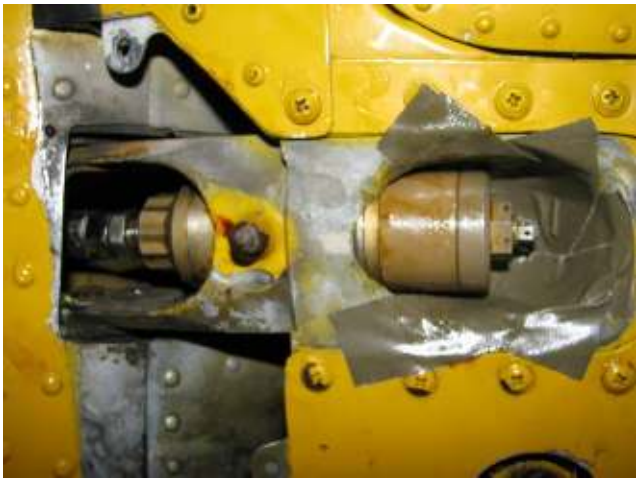

Fig 7c

(18) **IMPORTANT: AT THIS TIME - - - RE-INSTALL JACKS AND LIFT AIRCRAFT SO THAT MAIN WHEELS ARE FREE OF GROUND.**

(19) Remove the tension nut from the active end, and, again, re-lubricate the Through-Bolt outboard threads and the threads of the tension nut and the bearing surface of the collar and the tension nut with corrosion preventative lubricant. Then re-install the Collar (T-34 Spar Corp P/N 45-138) and the Tension Nut (T-34 Spar Corp P/N 45-139.)

(20) With a torque wrench, apply preload torque of 50 in-lbs to 45-139 Cable Tension Nut on the active end while holding the nearby Tension Cable swage fitting at the flats on the active side of the aircraft. See Fig. 8. Again check and adjust for balanced thread protrusion. The Through-Bolt, at this point, should NOT show threads extending past the

outboard edge of the tension nut. Rather, the through-bolt threads should remain recessed at ONE to TWO threads deep and embedded into the cable tension nut. Repeat steps 15, 16, & 17 as necessary to adjust Through Bolt insertion into Cable Swage Fitting to achieve reduced thread extension into the tension nut on the active end, after applying the 50 in-lbs of torque. Re-lubricate the tension nut each time it is removed and re-installed.

(21) After achieving satisfactory positioning of threads into the tension nut on the active end to be torqued, mark rotational position of Cable Tension Nut with a radial mark and a corresponding and aligned mark on the base of the associated nut which secures the main wing bolt and a small mark on the square ¼ inch tip of the through bolt. See Fig. 9.

Apply final torque by turning Cable Tension Nut on one end (one end ONLY) an additional **4½** turns minimum (not to exceed **4¾** turns) while holding Tension Cable swage fitting at the flats on the nearby cable swage fitting . When completed, there should be no more than 2 to 3 threads extending past the outboard end of the cable tension nut.

Fig 8. Pre-tension of 50 in-lbs applied.

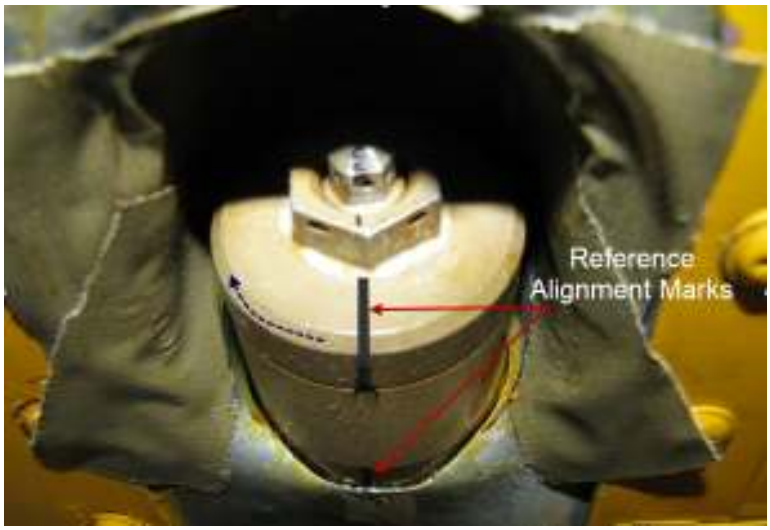

Fig. 9. After pre-tension of 50 in-lbs is applied, establish reference marks, and then further rotate tension nut 4½ to 4¾ turns. Use 5/8ths 6 point box end long reach wrench. A short reach wrench can be used, but it will require a "cheater." Note: before beginning 4½ to 4¾ turn, the through bolt threads are still recessed inside the cable tension nut.

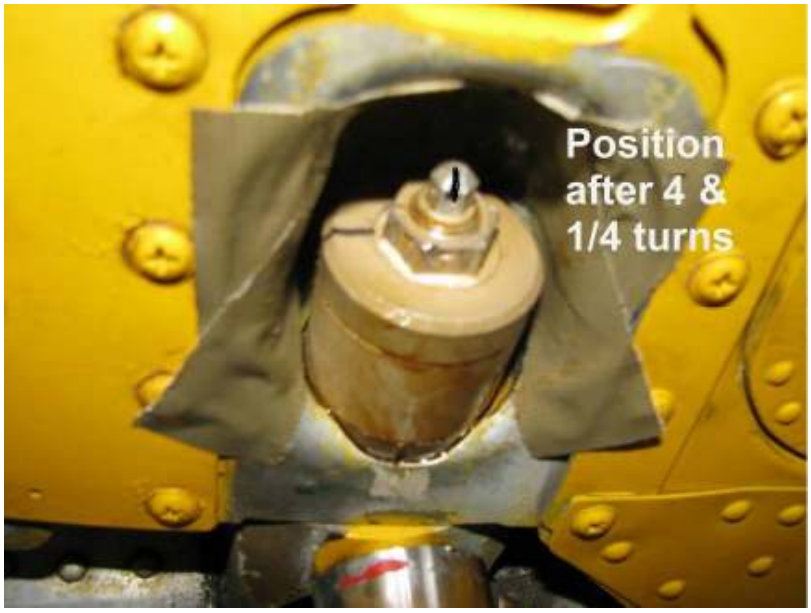

Fig. 10 Tension Nut after 4 ¼ turns (continue rotating tension nut an additional ¼ turn).

(22) Coat the exposed threads that protrude through the Cable Tension Nut with corrosion preventative compound.

(23) Safety wire the through bolt and the cable tension nut, being careful not to scratch the bathtub fitting.

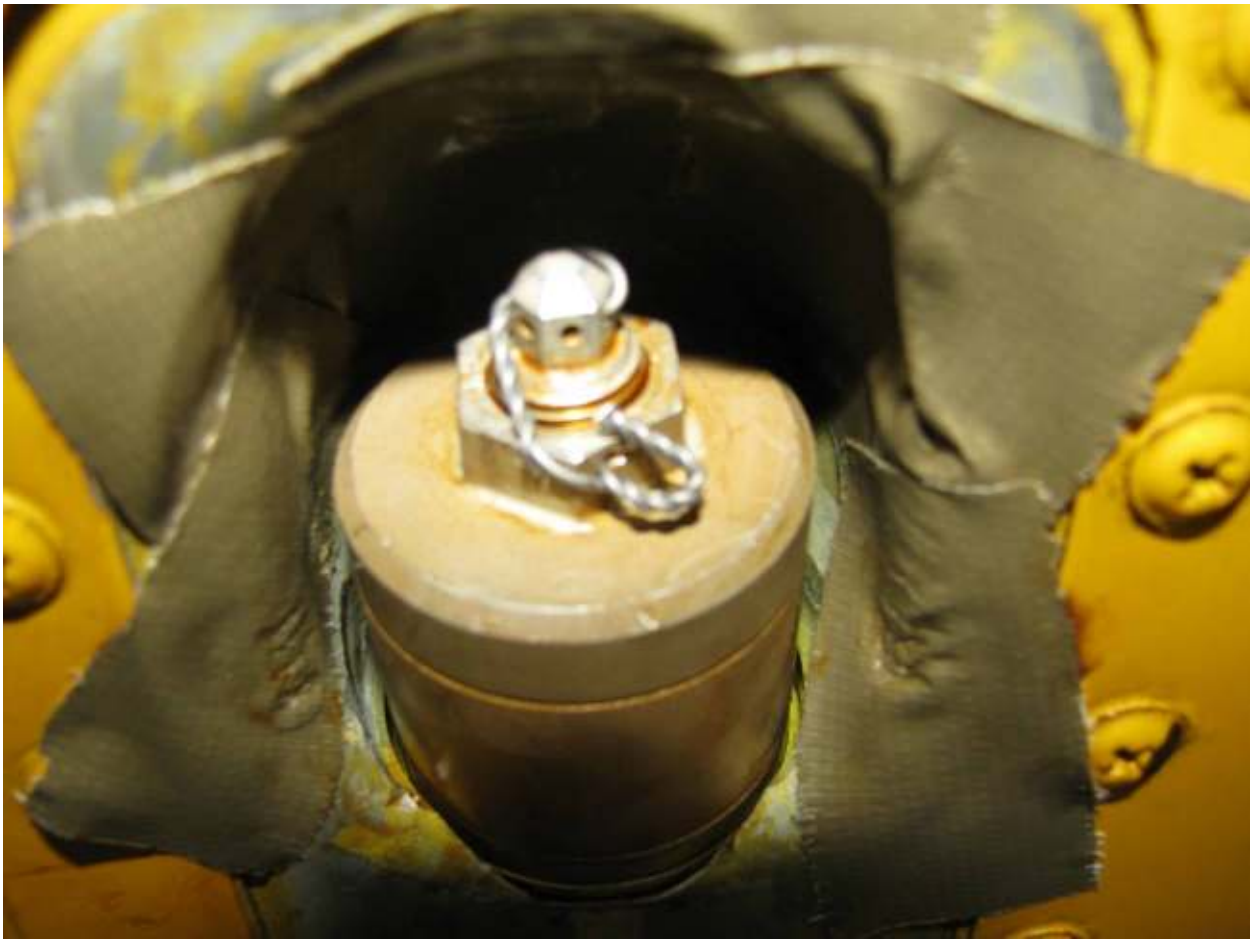

Fig. 11. Properly installed and torqued ALEC cable. Each side is symmetrical at the bath tub fitting and internally with respect to the thread engagement into the swage fitting. The tension nut, above, has been rotated 4½ turns after a pre-torque of 50 in-lbs has been applied to the tension nut.

(24) Place wheels on the ground and remove jack clear of the aircraft. Remove protective tape from the bath tub fitting and re-install bathtub covers. Note, it may be necessary to "dimple" the bathtub covers to allow clearance over the cable tension nut. Tooling for dimpling may be available from T-34 Spar Corp. Use best shop practice to achieve an adequate dimple in the bathtub covers. (Note: Dimpling the bathtub covers may damage the paint finish. Be prepared to repaint the covers if desired.)

(25) With the addition of the ALEC cable, there is no requirement that the main wing bolts be loosened and repeatedly torqued after the initial proper installation.

(26) Review and affix placards to the airplane in accordance with the Instructions for Continued Airworthiness applicable to this AMOC or STC.

(27) Reconnect the airplane battery, remove warning notices and restore power.

(28) Ensure all work areas are clean and clear of tools and miscellaneous items of equipment.

(29) Return airplane to service.

B. Spares

Not applicable

C. Record of Compliance

Upon completion of this AMOC, make an appropriate maintenance record entry. It is recommended that the parts list contained with this document be filed for future reference.